Evaluation

For preparations supplied in containers with a nominal volume of more than 100 mL, apply the criteria of test 2.A.

For preparations supplied in containers with a nominal volume of less than 100 mL, apply the criteria of test 2.B.

◆For preparations supplied in containers with a nominal volume of 100 mL, apply the criteria of test 2.B.◆

Test 2.A – Solutions for infusion or solutions for injection supplied in containers with a nominal content of more than 100 mL

The preparation complies with the test if the average number of particles present in the units tested does not exceed 12 per millilitre equal to or greater than 10 µm and does not exceed 2 per millilitre equal to or greater than 25 µm.

Test 2.B – Solutions for infusion or solutions for injection supplied in containers with a nominal content of less than 100 mL

The preparation complies with the test if the average number of particles present in the units tested does not exceed 3000 per container equal to or greater than 10 µm and does not exceed 300 per container equal to or greater than 25 µm.

01/2020:20920

2.9.20. PARTICULATE CONTAMINATION: VISIBLE PARTICLES

Particulate contamination consists of mobile undissolved substances, other than gas bubbles, unintentionally present in liquid preparations.

The test is intended to provide a simple procedure for the visual assessment of the quality of liquid preparations, if applicable after reconstitution, as regards visible particles.

EQUIPMENT

The equipment (see Figure 2.9.20.-1) consists of a viewing station comprising:

- a matt black panel (A) of appropriate size held in a vertical position;
- a non-glare white panel (B) of appropriate size held in a vertical position next to the black panel;
- a non-glare white panel (C) of appropriate size held in a horizontal position next to (A) and (B);
- a lampholder (D) fitted with a suitable, shaded, white-light source and with a suitable light diffuser (e.g. a viewing illuminator containing two 13 W fluorescent tubes, each 525 mm in length, or an appropriate light-emitting diode (LED) light source). The intensity of illumination at the viewing point is maintained between 2000 lux and 3750 lux, although higher values may be required for coloured glass or plastic containers and for coloured or turbid preparations.

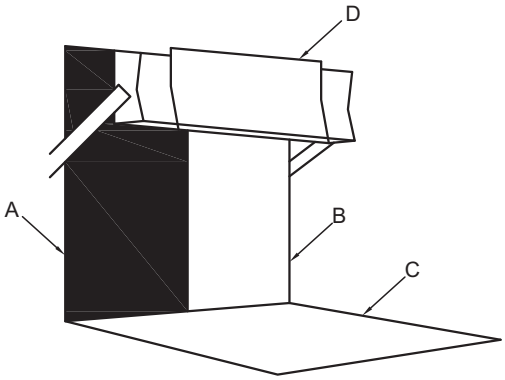

Figure 2.9.20.-1. – *Equipment for visible particles*

METHOD

Adequate visual inspection of the container and contents is necessary, which may require the removal of any adherent labels from the container. Gently swirl or invert the container, ensuring that air bubbles are not introduced, and observe without magnification for about 5 s in front of the white panel (B), although longer observation times may be required for coloured glass or plastic containers and for coloured or turbid preparations. Where inspection in the primary container is not possible, the contents may be transferred for inspection into a sample container that is free from visible particles, taking precautions to prevent contamination during transfer. Repeat the inspection in front of the black panel (A). Record the presence of any visible particles.

01/2008:20922

2.9.22. SOFTENING TIME DETERMINATION OF LIPOPHILIC SUPPOSITORIES

The test is intended to determine, under defined conditions, the time which elapses until a suppository maintained in water softens to the extent that it no longer offers resistance when a defined weight is applied.